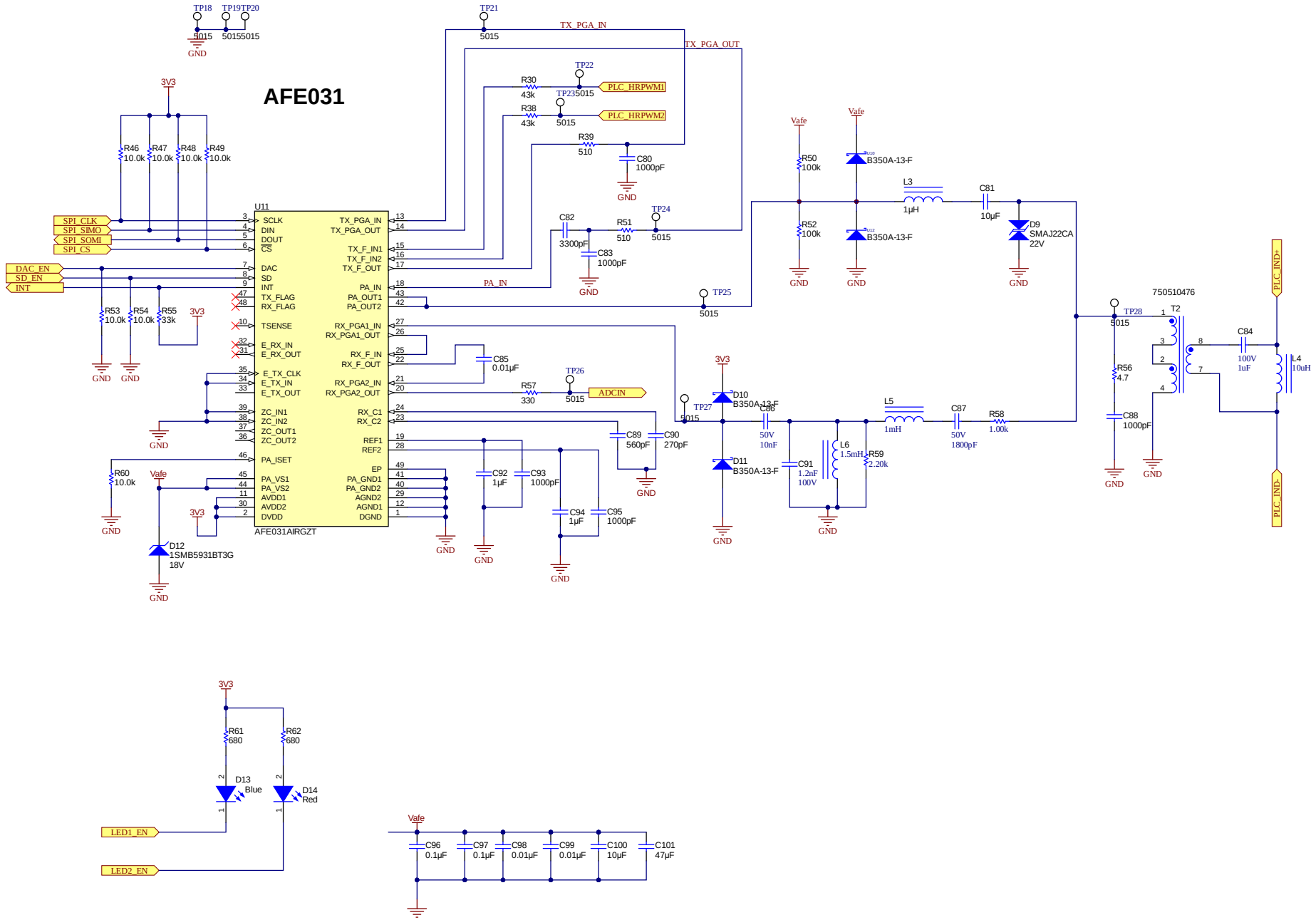

Texas Instruments and/or its licensors do not warrant the accuracy or completeness of this specification or any information contained therein. Texas Instruments and/or its licensors do not warrant that this design will meet the specifications, will be suitable for your application or fit for any particular purpose, or will operate in an implementation. Texas Instruments and/or its licensors do not warrant that the design is production worthy. You should completely validate and test your design implementation to confirm the system functionality for your application.

Orderable:	Designed for: Public Release	Mod. Date: 17-May-24
TID #: TIDA-010949	Project Title: TIDA-010949	
Number: TIDA-010949 Rev: E1	Sheet Title:	
SVN Rev: 4432 [Locally Modified]	Assembly Variant: [No Variations]	Sheet 5 of 8
Drawn By:	File: TIDA-010949 Power Optimizer_PLC.SchDoc	Size: A3
Engineer: Energy Infrastructure Team	Contact: http://www.ti.com/support	

Texas Instruments
http://www.ti.com

© Texas Instruments 2024

Comment	Description	Designator	Footprint	LibRef	Quantity
Printed Circuit Board	Printed Circuit Board	!PCB		CMP-0003618-2	1
0805YD225KAT2A	CAP, CERM, 2.2 uF, 16 V, +/- 10%, X5R, 0805	C1	0805_HV	CMP-0007679-2	1
GRM155R62A104KE14D	CAP, CERM, 0.1 uF, 100 V, +/- 10%, X5R, 0402	C2, C3, C4, C21, C22, C23, C24, C25, C26, C27, C28, C29	0402S	CMP-0006618-2	12
GRM32EC72A106KE05L	10µF ±10% 100V Ceramic Capacitor X7S 1210 (3225 Metric)	C5, C6, C7, C8, C9, C10, C11, C12, C13, C14, C15, C16, C17, C18, C19, C20, C47, C49	FP-GRM32EC72A106KE05L_1210-MFG	CMP-0087970-1	18
GRM155R71E104KE14D	CAP, CERM, 0.1 uF, 25 V, +/- 10%, X7R, 0402	C30, C31	0402S	CMP-0006659-2	2
04025U100FAT2A	10 pF ±1% 50V Ceramic Capacitor C0G, NP0 0402 (1005 Metric)	C32, C33, C34, C35	FP-04025U100FAT2A_0402-MFG	CMP-0097874-1	4
GRM188C71C225KE11D	2.2µF ±10% 16V Ceramic Capacitor X7S 0603 (1608 Metric)	C36, C37, C40, C41	FP-GRM188C71C225KE11D_0603-MFG	CMP-0089452-2	4
GRT1555C1E101JA02D	Multi-Layer Ceramic Capacitor 100pF 25V C0G ±5% 0402 Paper T/R	C38, C42	FP-GRT1555C1E101JA02D_0402-MFG	CMP-0096845-1	2
GRT155R61E105KE01D	Multi-Layer Ceramic Capacitor 1uF 25V X5R ±10% 0402 Paper T/R	C39, C43	FP-GRT155R61E105KE01D_0402-MFG	CMP-0096975-1	2
0805YD106KAT2A	CAP, CERM, 10 uF, 16 V, +/- 10%, X5R, 0805	C44, C45, C50, C51, C52, C53	0805_HV	CMP-0007677-2	6
0402YC104KAT2A	CAP, CERM, 0.1 uF, 16 V, +/- 10%, X7R, 0402	C46	0402	CMP-0006201-2	1
06031C104K4T2A	Cap Ceramic 100nF 100V X7R 10% SMD 0603 125°C Paper T/R	C48	FP-06031C104K4T2A_0603-MFG	CMP-0094779-1	1
06033C104JAT2A	CAP, CERM, 0.1 uF, 25 V, +/- 5%, X7R, 0603	C54, C77	0603	CMP-0006752-5	2
GRM155R71C104JA88D	CAP, CERM, 0.1 uF, 16 V, +/- 5%, X7R, 0402	C55	0402	CMP-0006640-2	1
GRM21BZ71H475KE15L	Chip Multilayer Ceramic Capacitors for General Purpose, 0805, 4.7uF, X7R, 15%, 10%, 50V	C56, C59, C60	FP-GRM21BZ71H475KE15L_0805-MFG	CMP-0028289-1	3
C0603C104K5RACTU	CAP, CERM, 0.1 uF, 50 V, +/- 10%, X7R, 0603	C57, C61	0603	CMP-0006861-4	2
GRM1555C1H151JA01D	CAP, CERM, 150 pF, 50 V, +/- 5%, C0G/NP0, 0402	C58	0402	CMP-0006421-2	1
C1608X7R1E105K080AB	CAP CER 1UF 16V Y5V 0603	C62, C64	0603	CMP-0006831-4	2
GRM31CR71E106KA12L	CAP, CERM, 10 uF, 25 V, +/- 10%, X7R, 1206	C63	1206_180	CMP-0008965-2	1
GRM155R71E104KE14D	CAP, CERM, 0.1 uF, 25 V, +/- 10%, X7R, 0402	C65, C67	0402	CMP-0006659-2	2
GRM155R61E105MA12D	CAP, CERM, 1 µF, 25 V,+/- 20%, X5R, 0402	C66, C68	0402	CMP-0078625-1	2
GRM155R71E103KA01D	CAP, CERM, 0.01 uF, 25 V, +/- 10%, X7R, 0402	C69, C71	0402	CMP-0006658-2	2
GRM1555C1E471JA01D	CAP, CERM, 470 pF, 25 V, +/- 5%, C0G/NP0, 0402	C70, C72	0402	CMP-0006389-2	2
CC0603JRNPO8BN102	CAP, CERM, 1000 pF, 25 V,+/- 5%, C0G/NP0, 0603	C73, C75	0603	CMP-0860530-1	2
GRM1555C1H301JA01D	CAP, CERM, 300 pF, 50 V, +/- 5%, C0G/NP0, 0402	C74, C76	0402	CMP-0006453-2	2
GRM155R61E105KA12D	CAP, CERM, 1 uF, 25 V, +/- 10%, X5R, 0402	C78, C79	0402S	CMP-0006608-2	2
GR443QR73D102KW01L	CAP, CERM, 1000 pF, 2000 V, +/- 10%, X7R, 1812	C80, C83	1812	GR443QR73D102KW01L	2
GRT31CR61H106KE01L	CAP, CERM, 10 µF, 50 V, +/- 10%, X5R, AEC-Q200 Grade 1, 1206	C81	1206_180	GRT31CR61H106KE01L	1
GRM1885C1H332JA01D	CAP, CERM, 3300 pF, 50 V, +/- 5%, C0G/NP0, 0603	C82	0603	GRM1885C1H332JA01D	1
CGA5L2X7R2A105K160AA	CAP, CERM, 1 uF, 100 V, +/- 10%, X7R, AEC-Q200 Grade 1, 1206	C84	1206_180	CMP-0008779-2	1
GRM188R71C103KA01D	CAP, CERM, 0.01 µF, 16 V, +/- 10%, X7R, 0603	C85, C98, C99	0603	GRM188R71C103KA01D	3
885012206089	CAP, CERM, 0.01 µF, 50 V,+/- 10%, X7R, 0603	C86	0603	CMP-0750039-1	1
GRM1885C1H182JA01D	CAP, CERM, 1800 pF, 50 V, +/- 5%, C0G/NP0, 0603	C87	0603	CMP-0007192-4	1
06035A102KAT2A	CAP, CERM, 1000 pF, 50 V, +/- 10%, C0G/NP0, 0603	C88	0603	06035A102KAT2A	1
GRM1885C1H561JA01D	CAP, CERM, 560 pF, 50 V, +/- 5%, C0G/NP0, 0603	C89	0603	GRM1885C1H561JA01D	1
06035A271JAT2A	CAP, CERM, 270 pF, 50 V, +/- 5%, C0G/NP0, 0603	C90	0603	06035A271JAT2A	1
06031C122JAT2A	CAP, CERM, 1200 pF, 100 V, +/- 5%, X7R, 0603	C91	0603	CMP-0006729-4	1
UMK107AB7105KA-T	CAP, CERM, 1 µF, 50 V, +/- 10%, X7R, 0603	C92, C94	0603	UMK107AB7105KA-T	2
GRM188R71C102KA01D	CAP, CERM, 1000 pF, 16 V, +/- 10%, X7R, 0603	C93, C95	0603	GRM188R71C102KA01D	2
160R07X104KV4T	CAP, CERM, 0.1 µF, 16 V, +/- 10%, X5R, 0402	C96, C97	0402_065	160R07X104KV4T	2
GRT188R61E106ME13D	CAP, CERM, 10 µF, 25 V, +/- 20%, X5R, 0603	C100	0603	GRT188R61E106ME13D	1
JMK212BJ476MG-T	CAP, CERM, 47 µF, 6.3 V, +/- 20%, X5R, 0805	C101	0805_HV	JMK212BJ476MG-T	1
DFLS1150-7	Diode, Schottky, 150 V, 1 A, PowerDI123	D1, D4	PowerDI123	CMP-0077034-2	2
MMSZ4689-E3-08	Diode, Zener, 5.1 V, 500 mW, SOD-123	D2, D3, D6	SOD-123	CMP-0077599-3	3
DFLS220L-7	Diode, Schottky, 20 V, 2 A, PowerDI123	D5	PowerDI123	CMP-0076992-2	1
MBR0540T1G	Diode, Schottky, 40 V, 0.5 A, SOD-123	D7	SOD-123	CMP-0028526-2	1
Zener	Diode, Zener, 3.6 V, 500 mW, SOD-123	D8	SOD-123	CMP-0005782-1	1
SMAJ22CA	Diode, TVS, Bi, 22 V, 35.5 Vc, 400 W, 11.3 A, SMA (non-polarized)	D9	SMA_Bi	CMP-0085011-1	1
B350A-13-F	Diode, Schottky, 50 V, 3 A, SMA	D10, D11, U10, U12	SMA	CMP-0028416-2, B350A-13-F	4
1SMB5931BT3G	Diode, Zener, 18 V, 550 mW, SMB	D12	SMB	1SMB5931BT3G	1
150060BS75000	LED, Blue, SMD	D13	WL-SMCW_Blue	150060BS75000	1
150060RS75000	LED, Red, SMD	D14	WL-SMCW_RED	150060RS75000	1
MH1608-601Y	600 Ohms @ 100 MHz 1 Power, Signal Line Ferrite Bead 0603 (1608 Metric) 1A 200mOhm	FB1, FB2, FB3	FP-MH1608-601Y_0603-MFG	CMP-0037505-1	3
NY PMS 440 0025 PH	Machine Screw, Round, #4-40 x 1/4, Nylon, Philips panhead	H1, H2, H3, H4	NY PMS 440 0025 PH	CMP-0003617-1	4
1902C	Standoff, Hex, 0.5"L #4-40 Nylon	H5, H6, H7, H8	Keystone_1902C	CMP-0003610-1	4
OSTT7020150	Terminal Block, 6.35mm, 2x1, TH	J1, J3	On-Shore_OSTT7020150	CMP-0075360-1	2
HSEC8-160-01-L-DV-A-BL	C2000 controlCARD-120HSEC connector, SMT	J2	controlCARD-120HSEC	CMP-0003814-2	1
7443641000	Inductor, Shielded, Ferrite, 10 µH, 30 A, 0.0024 ohm, SMD	L1	WE-HCF_2818	CMP-0086005-1	1
SDEM20161T-4R7MS	4.7µH Unshielded Inductor 1.1A 426mOhm Max 0806 (2016 Metric)	L2	FP-SDEM20161T-4R7MS_SMD2-MFG	CMP-0089347-1	1
LQH2MCN1R0M52	Inductor, Wirewound, Ferrite, 1 µH, 0.595 A, 0.25 ohm, SMD	L3	LQH2MC_52	LQH2MCN1R0M52	1
7443631000	Inductor, Shielded Drum Core, Mn-Zn, 10 uH, 16 A, 0.00796 ohm, SMD	L4	WE-HCF_2013	CMP-0064060-1	1
DO1607B-105MLB	Inductor, Drum Core, Ferrite, 1 mH, 0.1 A, 19 ohm, SMD	L5	DO1607B	CMP-0061680-2	1
DO1607B-155MLB	Inductor, Drum Core, Ferrite, 1.5 mH, 0.08 A, 21 ohm, SMD	L6	DO1607B	CMP-0061972-2	1
THT-14-423-10	Thermal Transfer Printable Labels, 0.650" W x 0.200" H - 10,000 per roll	LBL1	Label_650x200	CMP-0003625-1	1
CSD19532Q5B	MOSFET, N-CH, 100 V, 17 A, DNK0008A (VSON-CLIP-8)	Q1	DNK0008A	CMP-0000958-3	1
BSS169H6327XTSA1	MOSFET, N-CH, Depletion Mode, 100 V, 0.17 A, AEC-Q101, SOT-23	Q2	SOT-23	CMP-0000949-3	1
RC0603JR-070RL	RES, 0, 5%, 0.1 W, 0603	R1	0603	CMP-0025885-5	1
ULRG32512R001FLFSLT	Res Metal Strip 2512 0.001 Ohm 1% 3W ±50ppm/C Pad SMD Automotive T/R	R2, R6, R35	FP-ULRG32512R001FLFSLT_2512-MFG	CMP-0042666-1	3
RCG04020000Z0ED	Res Thick Film 0402 0 Ohm 1/16W Molded SMD	R3, R4, R5, R7	FP-RCG04020000Z0ED_0402-MFG	CMP-0097912-1	4
RC0402FR-0710K5L	RES, 10.5 k, 1%, 0.063 W, 0402	R8, R9, R14, R15	0402S	CMP-0078781-1	4
RC0603FR-0720RL	RES, 20.0, 1%, 0.1 W, 0603	R10, R11, R12, R13	0603	CMP-0022908-4	4
RC0603FR-071KL	RES, 1.00 k, 1%, 0.1 W, 0603	R16, R17, R58	0603	CMP-0022895-5	3
CRCW04020000Z0ED	RES, 0, 5%, 0.063 W, AEC-Q200 Grade 0, 0402	R18	0402	CMP-0026822-3	1
CRCW0805118KFKEA	RES, 118 k, 1%, 0.125 W, AEC-Q200 Grade 0, 0805	R19	0805_HV	CMP-0020857-3	1
RC1005F1153CS	RES, 115 k, 1%, 0.0625 W, 0402	R20	0402	CMP-0077547-1	1
CRCW040210K0JNED	RES, 10 k, 5%, 0.063 W, AEC-Q200 Grade 0, 0402	R21	0402	CMP-0026825-5	1
CRCW080510K0FKEA	RES, 10.0 k, 1%, 0.125 W, AEC-Q200 Grade 0, 0805	R22	0805_HV	CMP-0020842-3	1
CRCW040247R0JNED	RES, 47, 5%, 0.063 W, AEC-Q200 Grade 0, 0402	R23	0402	CMP-0026936-3	1
RC0603FR-0764K9L	RES, 64.9 k, 1%, 0.1 W, 0603	R24	0603	CMP-0023228-5	1
CRCW040228K7FKED	RES, 28.7 k, 1%, 0.063 W, AEC-Q200 Grade 0, 0402	R25	0402	CMP-0026220-2	1
CRCW0402150KFKED	RES, 150 k, 1%, 0.063 W, AEC-Q200 Grade 0, 0402	R26	0402	CMP-0026021-3	1
RC0603FR-0751KL	RES, 51.0 k, 1%, 0.1 W, 0603	R27	0603	CMP-0023167-5	1
CRCW040213K3FKED	RES, 13.3 k, 1%, 0.063 W, AEC-Q200 Grade 0, 0402	R28	0402	CMP-0026004-3	1
RC0402JR-070RP	Res Jumper Thick Film 0402 0 Ohm 5% 1/16W Molded SMD Paper T/R	R29	FP-RC0402JR-070RP_0402-MFG	CMP-0093147-1	1
CRCW060343K0JNEA	RES, 43 k, 5%, 0.1 W, 0603	R30, R38	0603	CRCW060343K0JNEA	2
RK73H1ETTP47R0F	RES, 47.0, 1%, 0.063 W, 0402	R31, R32	0402	CMP-0026751-1	2
RK73H1ETTP10R0F	RES, 10.0, 1%, 0.063 W, 0402	R33, R34, R36, R37	0402	CMP-0026749-1	4
RC0603JR-07510RL	RES, 510, 5%, 0.1 W, 0603	R39, R51	0603	RC0603JR-07510RL	2
RR1220P-3012-D-M	RES, 30.1 k, 0.5%, 0.1 W, 0805	R40, R41	0805_HV	CMP-0019234-2	2
CRCW040256R2FKED	RES, 56.2, 1%, 0.063 W, AEC-Q200 Grade 0, 0402	R42, R44	0402	CMP-0026454-2	2
RT0603BRD071KL	High Precision-High Stability Chip Resistor Thin Film 0603 1kOhm 0.1% Paper T/R	R43, R45	FP-RT0603BRD071KL_0603-MFG	CMP-0088560-2	2
CRCW040210K0FKED	RES, 10.0 k, 1%, 0.063 W, 0402	R46, R47, R48, R49, R53, R54, R60	0402	CRCW040210K0FKED	7
RC0603FR-07100KL	RES, 100 k, 1%, 0.1 W, 0603	R50, R52	0603	RC0603FR-07100KL	2
CRCW040233K0JNED	RES, 33 k, 5%, 0.063 W, 0402	R55	0402	CRCW040233K0JNED	1
ERJ-6GEYJ4R7V	RES, 4.7, 5%, 0.125 W, 0805	R56	0805_HV	ERJ-6GEYJ4R7V	1
CRCW0402330RJNED	RES, 330, 5%, 0.063 W, 0402	R57	0402	CRCW0402330RJNED	1
RC0603FR-072K2L	RES, 2.20 k, 1%, 0.1 W, 0603	R59	0603	CMP-0022986-5	1
CRCW0603680RJNEA	RES, 680, 5%, 0.1 W, 0603	R61, R62	0603	CRCW0603680RJNEA	2
070-7148	EP7 8-Term., SMT, Horizontal	T1	EP7_7148	EP7, 070-7148	1
750510476	Transformer, 870uH. TH	T2	Wurth_750510476	CMP-0030703-1	1
5001	Test Point, Miniature, Black, TH	TP16, TP17	Keystone5001	CMP-0055138-2	2
5015	Test Point, Miniature, SMT	TP18, TP19, TP20, TP21, TP22, TP23, TP24, TP25, TP26, TP27, TP28	Testpoint_Keystone_Miniature	CMP-0055152-2	11
LM74610QDGKRQ1	Zero Iq Reverse Polarity Protection Smart Diode Controller, DGK0008A (VSSOP-8)	U1	DGK0008A_N	CMP-0076397-2	1
LMG2100R026	100-V, 53-A GaN Half-Bridge Power Stage	U2, U3	VBN0016A-MFG	CMP-0120692-1	2
LMR38020FSDDAR	SIMPLE SWITCHER 4.2-V to 80-V, 2-A Synchronous Buck Converter	U4	DDA0008E-MFG	CMP-0094053-1	1
LM2733XMF/NOPB	0.6/1.6 MHz Boost Converters With 40V Internal FET Switch in SOT-23, DBV0005A (SOT-23-5)	U5	DBV0005A_N	CMP-0072752-2	1
TPS7A2033PDBVR	300-mA, Ultra-Low-Noise, Low-IQ, High PSRR LDO	U6	DBV0005A-MFG	CMP-0092532-1	1
INA241B4IDDF	-4-V to 110-V, Bidirectional, Ultra-Precise Current Sense Amplifier With Enhanced PWM Rejection	U7	DDF0008A-MFG	CMP-0096512-2	1
INA181A3IDBV	Bidirectional, Low- and High-Side Measurement, Multichannel, Voltage Output, Current-Sense Amplifier, DBV0006A (SOT-6)	U8	DBV0006A_N	CMP-0013234-2	1
TLV9002IDDFR	TLV9002IDDFR, DDF0008A (SOT-23-THN-8)	U9	DDF0008A_N	CMP-0086102-1	1
AFE031AIRGZT	Powerline Communications Analog Front End, 7 to 26 V, -40 to 125 degC, 48-pin QFN (RGZ0048B), Green (RoHS & no Sb/Br)	U11	RGZ0048B - Thicker Vias	AFE031AIRGZT	1